DO NOT SCALE

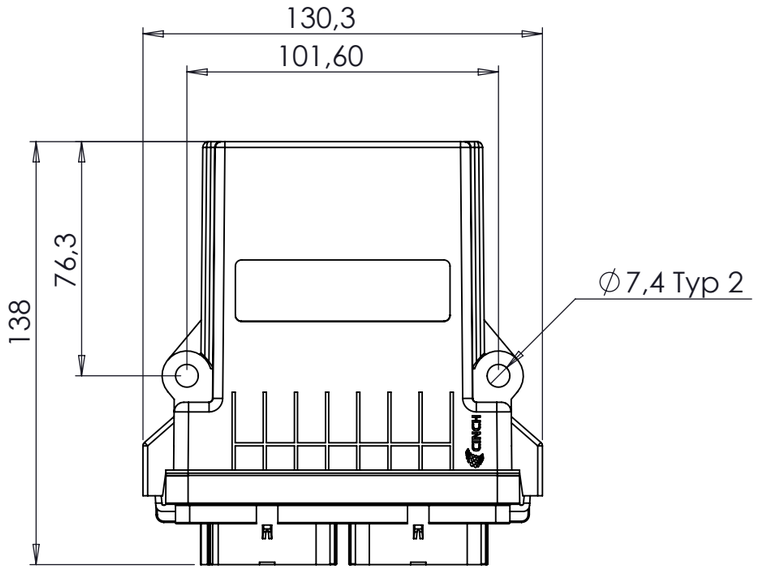

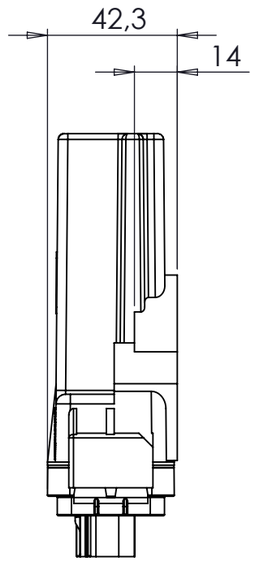

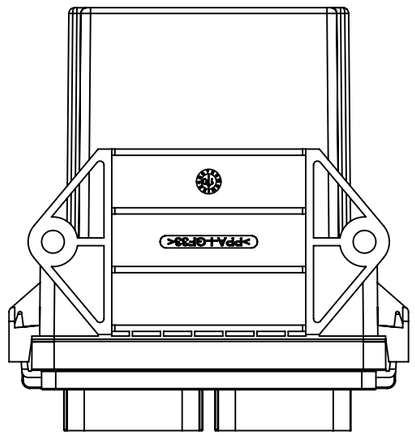

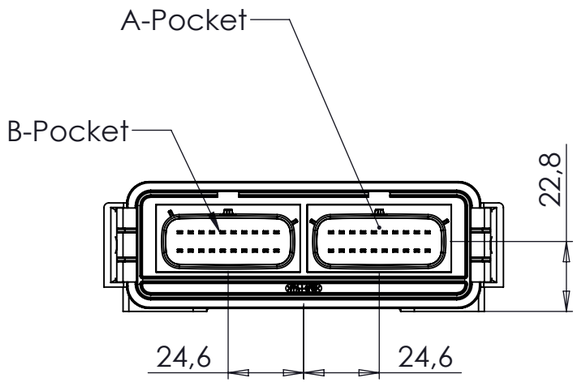

Notes:

1. The fasteners (M6 or 1/4") should be tightened by hand, applying equal pressure against the mounting surface. They should then be torqued to just 1.1 to 1.4Nm to prevent over compression of the mounting lugs. If necessary, a suitable thread locking adhesive should be used to prevent loosening under vibration.
2. Mating Connectors
   - APocket: Molex 33472-2001
   - B Pocket: Molex 33472-2002
   - Contacts: Molex 33012-3002
3. The mating loom should be secured to the vehicle chassis (or similar) at a maximum distance of 400mm (15.75") away from the unit centre line. If the unit is to be mounted where it can experience shock or excessive vibration the harness should be mounted to the same structure as the unit itself.
4. Mass: 350g

MATERIAL AND CONDITION See Notes	UNLESS OTHERWISE STATED:– 1. REMOVE BURRS AND SHARP EDGES TO 0,2 MAX. 2. ALL UNSPECIFIED FILLET RADII TO BE 0,2 MAX. 3. ALL DIMENSIONS APPLY TO PRODUCT IN ITS FINISHED STATE AT 20°. 4. DRAWN IN ACCORDANCE WITH BS8888	DIMENSIONS IN MILLIMETERS UNLESS OTHERWISE INDICATED SCALE 1:2	DRAWN TO BS 888 THIRD ANGLE PROJECTION		TITLE M110 Assembly Customer Information Drawing						SHEET 1 OF 1
TOOLS AND GAUGES N/A					DRAWING No. 068883CI						
SURFACE TEXTURE N/A	TOLERANCE UNLESS OTHERWISE STATED 1DP ±0,1 2DP ±0,05 3DP ±0,02 ANGLES ±0.5°	NEXT HIGHER ASSY.: USED ON:		A3	PART No. 13T-068883						
TREATMENT N/A											
FINISHING PROCESS N/A											
		Initial design				BDE Ltd		BDE Ltd	N/A	21 OCT 2016	01
		CHANGE DESCRIPTION				ENGINEER	CHECKED	DRAWN	CRN No.	DATE	REV